TE16-B2-1000

→ ARCO PARABÓLICO DE 2° GRAU;

→ DETERMINAR O ESFORÇO CORTANTE E O ESFORÇO AXIAL NA SEÇÃO "S";

→ SINAIS CONFORME A CONVENÇÃO DE DIAGRAMAS;

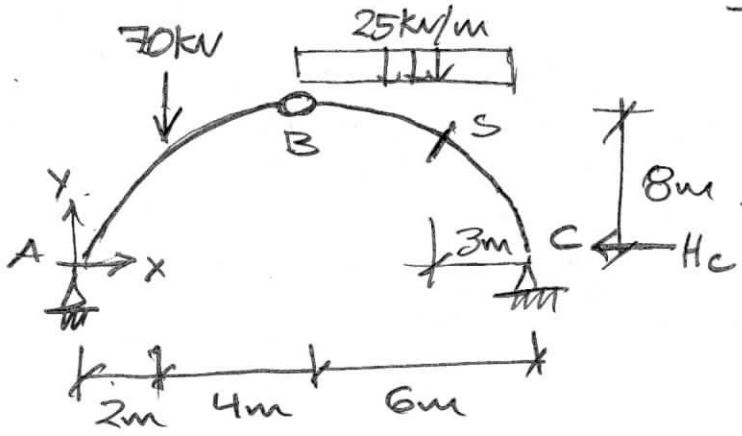

$\Sigma M_A = 0 \curvearrowleft \oplus \quad V_B \times 12 - 70 \times 2 - 25 \times 6 \times 9 = 0$

$V_B = \frac{1}{12}(140 + 25 \times 45) = \frac{745}{6}\ kN = 124{,}17\ kN$

$\Sigma M_B = 0 \curvearrowleft \oplus \quad V_B \times 6 - 25 \times \frac{6^2}{2} - Hc \times 8 = 0$

$Hc = \frac{1}{8}\left(\frac{745}{6} \times 6 - 25 \times \frac{36}{2}\right) = \frac{295}{8}\ kN = 36{,}875\ kN$

• Eq. do Arco Parabólico: A(0;0) B(6;8) C(12;0)

$$\begin{bmatrix} 1 & 0 & 0 \\ 1 & 6 & 6^2 \\ 1 & 12 & 12^2 \end{bmatrix} \begin{Bmatrix} a \\ b \\ c \end{Bmatrix} = \begin{Bmatrix} 0 \\ 8 \\ 0 \end{Bmatrix}$$

$y(x) = 2{,}6667x - 0{,}22222x^2$

$y'(x) = 2{,}6667 - 0.44444x$

$|\alpha| = |\text{arctg}(y'(x=a))| = |\text{arctg}(2{,}6667 - 0{,}44444 \times 9)| = |-0{,}92727|$

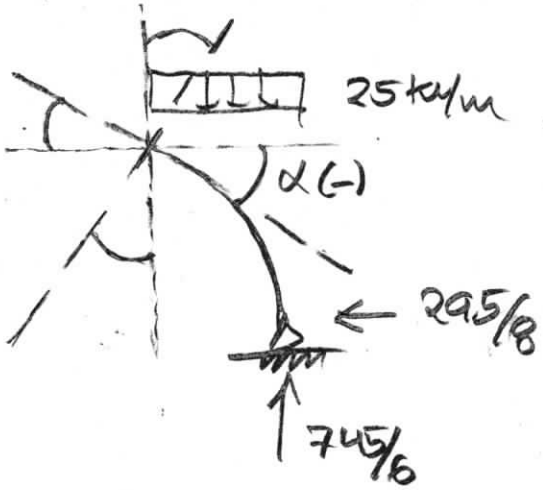

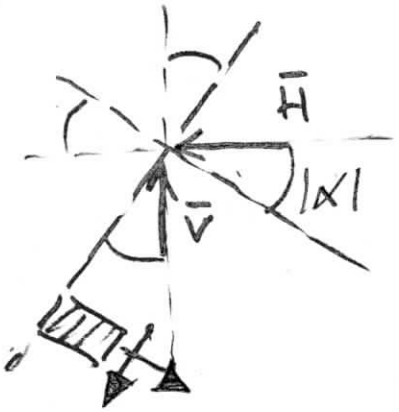

$V_S = -\bar{V}\cos|\alpha| + \bar{H}\,\text{sen}|\alpha| \qquad N_S = -\bar{V}\,\text{sen}|\alpha| - \bar{H}\cos|\alpha|$

$\bar{V} = +745/6 - 25 \times 3 = 295/6$

$\bar{H} = 295/8$

$\cos|\alpha| = 0,6$

$\text{sen}|\alpha| = 0,8$

$V_S = -295/6 \times 0,6 + 295/8 \times 0,8 = \underline{0 \text{ (ZERO)}}$ //

$N_S = -295/6 \times 0,8 - 295/8 \times 0,6 = \underline{-61,458 \text{ kN}}$ //

TE16 - B2 - 1001

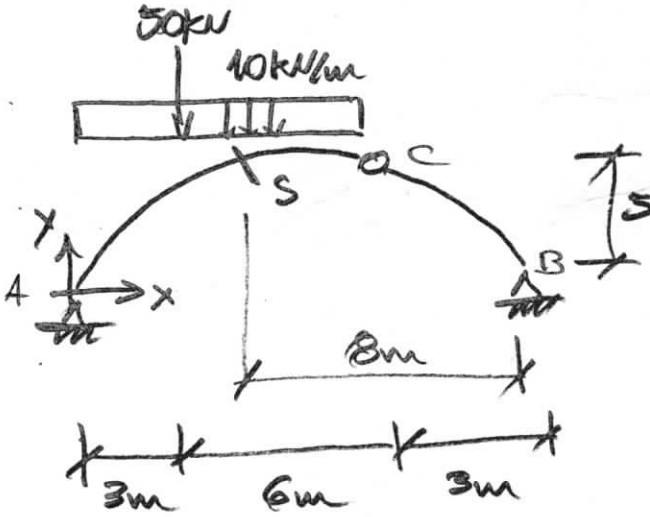

=> ARCO PARABÓLICO DE 2° GRAU;

=> DETERMINA OS ESFORÇOS CORTANTE E AXIAL NA SEÇÃO "S"

=> SINAIS CONFORME A CONVENÇÃO DE DIAGRAMAS;

$\Sigma M_A = 0 \ \circlearrowleft\oplus \quad V_B \times 12 - 50 \times 3 - 10 \times 9^2/2 = 0 \quad V_B = 46{,}25\ kN \uparrow$

$\Sigma F_V = 0 \ \uparrow\oplus \quad V_A + V_B - 50 - 10 \times 9 = 0 \quad V_A = 93{,}75\ kN \uparrow$

$M_{CO} = 46{,}25\ kN \times 3m = 138{,}75\ kN.m$

$H = M_{CO}/f = 138{,}75\ kN.m / 5m = 27{,}75\ kN \rightarrow$

→ Eq. do Arco: A(0,0) C(9;5) B(12;0)

$$\begin{bmatrix} 1 & 0 & 0 \\ 1 & 9 & 81 \\ 1 & 12 & 144 \end{bmatrix} \begin{Bmatrix} a \\ b \\ c \end{Bmatrix} = \begin{Bmatrix} 0 \\ 5 \\ 0 \end{Bmatrix}$$

$y(x) = 2{,}2222x - 0{,}18519x^2$

$y'(x) = 2{,}2222 - 0{,}37038x$

$\cos \alpha_S = \cos(\text{arctg}(2{,}2222 - 0{,}37038 \times 4)) = 0{,}80358$

$\text{Sen}\,\alpha_S = \text{Sen}(\text{arctg}(2{,}2222 - 0{,}37038 \times 4)) = 0{,}59519$

$\bar{H} = 27{,}75\ kN \qquad \bar{V} = 93{,}75\ kN - 50\ kN - 10\ kN/m \times 4m = 3{,}75\ kN$

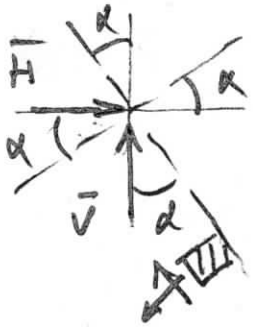

$V_S = 3{,}75\ kN \times 0{,}80358 - 27{,}75 \times 0{,}59519$

$V_S = -13{,}503\ kN$ //

$N_S = -3{,}75\ kN \times 0{,}59519 - 27{,}75 \times 0{,}80358$

$N_S = -24{,}531\ kN$ //

TE16 - B2 - 1002

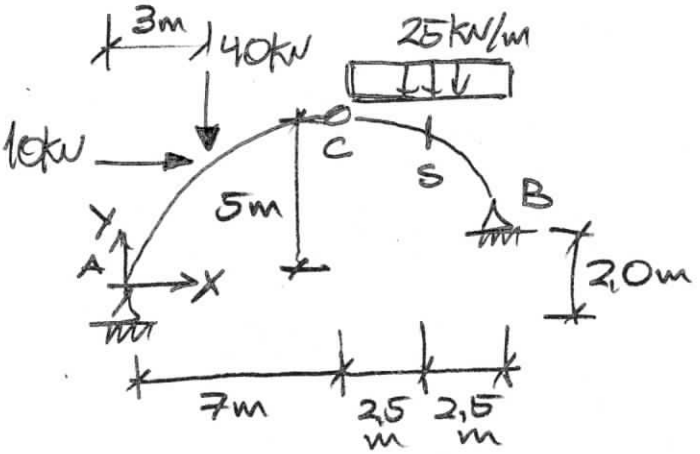

→ Arco Parabólico 2° grau;

→ DETERMINAR: V_S e N_S

EQ DO ARCO:

A(0;0) C(7;5) B(12;2)

$$\begin{bmatrix} 1 & 0 & 0 \\ 1 & 7 & 7^2 \\ 1 & 12 & 12^2 \end{bmatrix} \begin{Bmatrix} a \\ b \\ c \end{Bmatrix} = \begin{Bmatrix} 0 \\ 5 \\ 2 \end{Bmatrix}$$

$$y(x) = 1{,}480952x - 0{,}109524x^2$$

$$y(x=3) = 1{,}480952 \times 3 - 0{,}109524 \times 3^2 = 3{,}45713\,m$$

$$\Sigma M_C^{DIR} = 0 \quad \curvearrowleft \oplus \quad V_B \times 5 - H_B \times 3 - 25 \times \frac{5^2}{2} = 0$$

$$5V_B - 3H_B = 312{,}5$$

$$\Sigma M_A = 0 \quad \curvearrowleft \oplus \quad V_B \times 12 + H_B \times 2 - 40 \times 3 - 10 \times 3{,}45713 - 25 \times 5 \times 9{,}5 = 0$$

$$12V_B + 2H_B = 1342{,}07$$

$$\begin{cases} 5V_B - 3H_B = 312{,}5 \\ 12V_B + 2H_B = 1342{,}07 \end{cases}$$

$V_B = 101{,}11\,kN \uparrow$

$H_B = 64{,}355\,kN \leftarrow$

$$\alpha(x=9{,}5) = \operatorname{arctg}(1{,}480952 - 2 \times 0{,}109524 \times 9{,}5)$$

$\alpha_S = -0{,}540424$

$\cos|\alpha_S| = 98575$

$\operatorname{sen}|\alpha_S| = 0{,}5145$

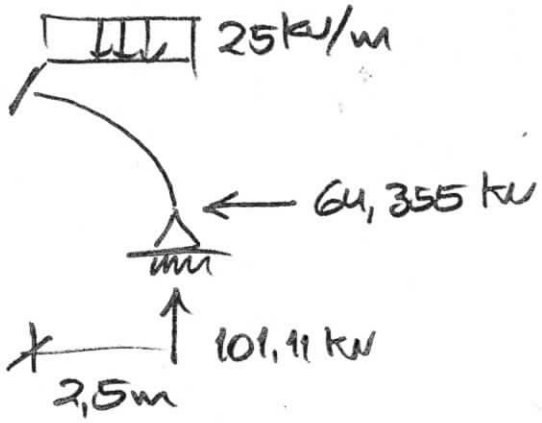

$\bar{H} = 64{,}355\,kN \leftarrow$

$\bar{V} = 101{,}11 - 25 \times 2{,}5$

$\bar{V} = 38{,}61\,kN \uparrow$

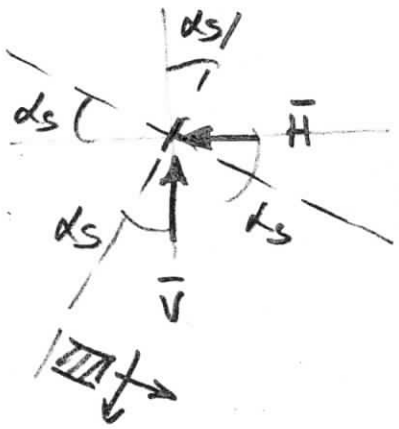

$$V_S = -\bar{V}\cos\alpha_S + \bar{H}\,\text{sen}\,\alpha_S$$

$$N_S = -\bar{V}\,\text{sen}\,\alpha_S - \bar{H}\cos\alpha_S$$

$$V_S = -38{,}61 \times 0{,}8575 + 64{,}355 \times 0{,}5145 = \underline{0\ kN}\ //$$

$$N_S = -38{,}61 \times 0{,}5145 - 64{,}355 \times 0{,}8575 = \underline{-75{,}05\ kN}\ //$$

TE16 - B2 - 2000

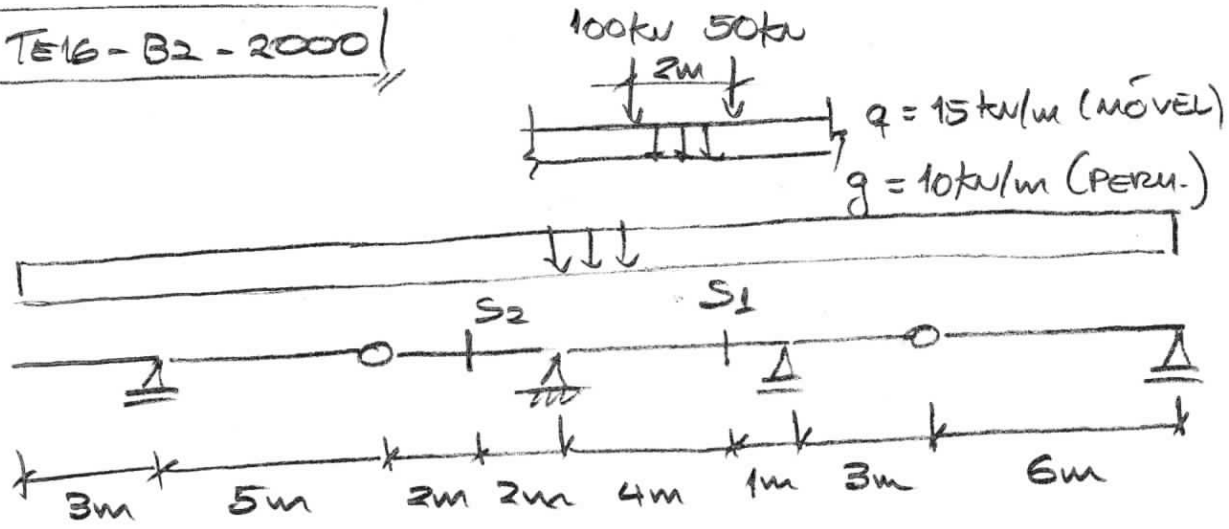

DETERMINAR: $M_{S1\,MÁX}$ e $V_{S1\,MÍN}$;

LI M_{S1}:

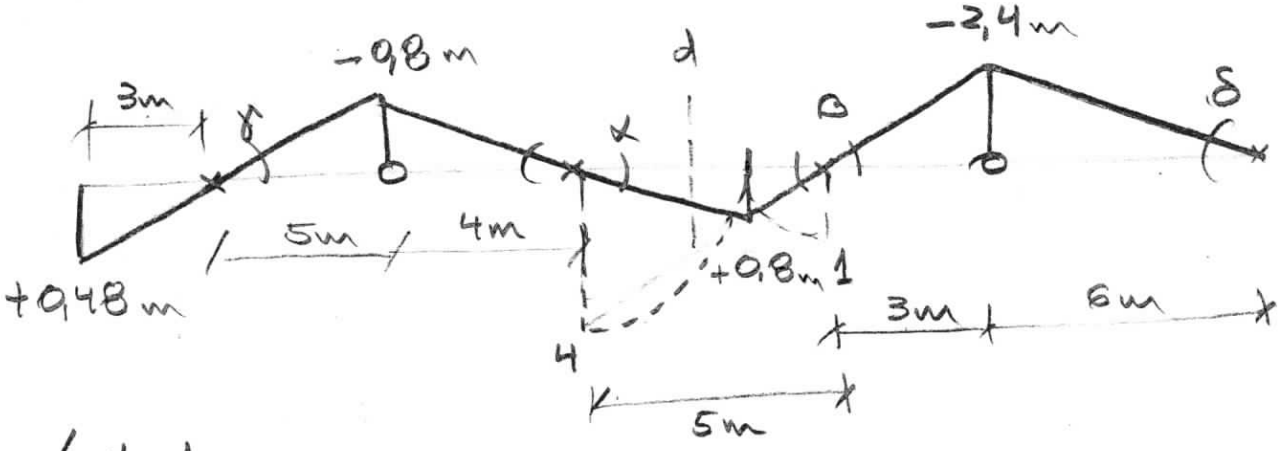

$tg\alpha = 1/5$ $\quad a = tg\alpha \times 4 = 1/5 \times 4 = 4/5 = 0{,}8$

$tg\beta = 4/5$ $\quad b = tg\gamma \times 3 = 4/25 \times 3 = 12/25 = 0{,}48$

$tg\gamma = 0{,}8/5 = 4/25$ $\quad c = tg\beta \times 3 = 4/5 \times 3 = 12/5 = 2{,}4$

$tg\delta = \frac{12/5}{6} = 2/5$

$A\ominus = 9m \cdot (-0{,}8m) \times 1/2 + 9m \cdot (-2{,}4m) \times 1/2 = -14{,}4\,m^2$

$A\oplus = 3m \times 0{,}48m \times 1/2 + 5m \cdot 0{,}8m \times 1/2 = +2{,}72\,m^2$

$-11{,}68\,m^2$

$d = tg\alpha \times 2m = 1/5 \times 2 = 2/5 = 0{,}4\,m$

$M_{S1\,MÁX} = (-11{,}68\,m^2) \times 10\,\frac{kN}{m} + (2{,}72\,m^2) \times 15\,kN/m$

$+ 100\,kN(0{,}8m) + 50\,kN(0{,}4\,m) = \boxed{+24\,kNm}$

LI V_{S2}:

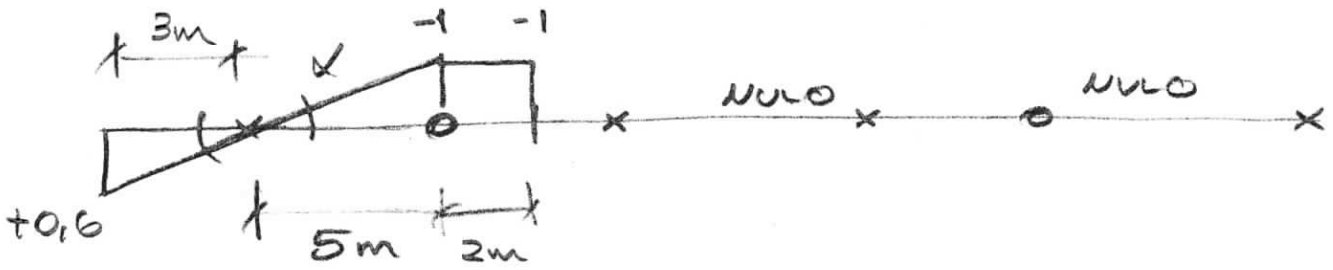

$tg\alpha = 1/5 \qquad a = 1/5 \times 3 = 3/5 = 0{,}6$

$A\ominus = 5m \times (-1) \times 1/2 + (-1) \times 2m = -4{,}5\,m$

$A\oplus = 3m \times 0{,}6 \times 1/2 = 3 \times 0{,}6 \times 0{,}5 = +0{,}9\,m$

$-3{,}6\,m$

$V_{S2\,MÍN} = (-3{,}6m) \times 10\,\frac{kN}{m} + (-4{,}5m) \times 15\,kN/m$

$+ 100\,kN(-1) + 50\,kN(-1) = \boxed{-253{,}5\,kN}$

TE16 - B2 - 2001

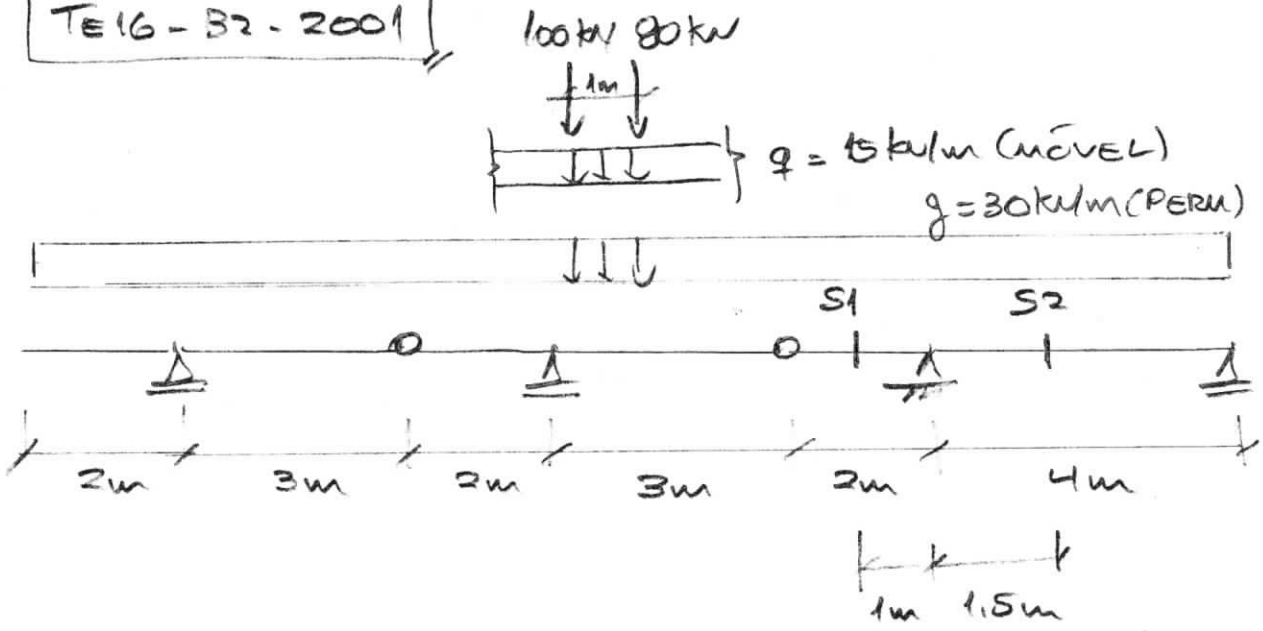

LI MS1

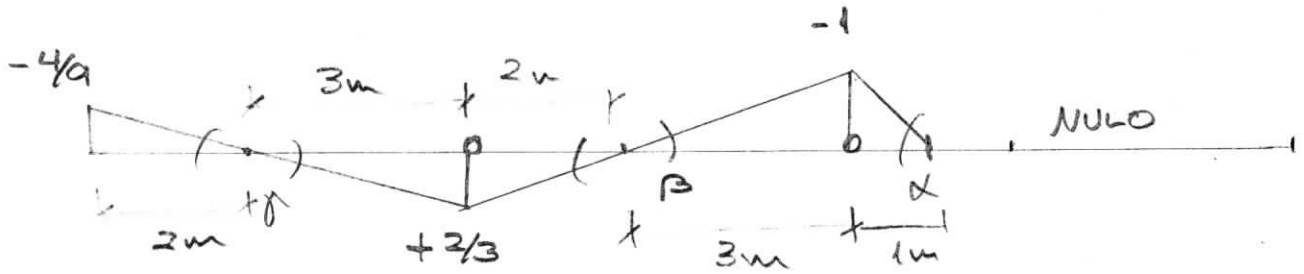

$tg\alpha = 1 \quad tg\beta = 1/3 \quad tg\gamma = 2/9$

$A_{\oplus} = (2/3\,m \times 5\,m) \times 1/2 = +5/3\,m^2$

$A_{\ominus} = -4/9\,m \times 2m \times 1/2 - 1m \times 3m \times 1/2 - 1 \times 1m \times 1/2 = -22/9\,m^2$

$A_{TOTAL} = 5/3 - 22/9 = -7/9\,m^2$

$$M_{S1\,MÁX} = \left(-\frac{7}{9}\,m^2\right) \times 30\frac{kN}{m} + \left(\frac{5}{3}\,m^2\right) \times 15\frac{kN}{m}$$

$$+ 100\,kN\left(+\frac{2}{3}\,m\right) + 80\,kN\left(\frac{2}{9} \times 2m\right) = \frac{935}{9} = \boxed{103{,}9\,kNm}$$

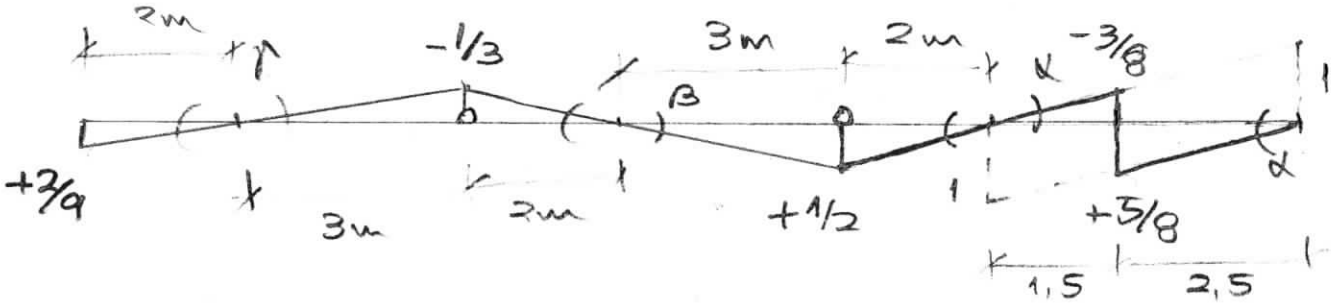

$tg\alpha = 1/4 \quad tg\beta = 1/2 \times 1/3 = 1/6 \quad tg\gamma = 1/3 \times 1/3 = 1/9$

$$A_{\oplus} = 3/9 \times 2 \times 1/2 + 5 \times 1/2 \times 1/2 + 5/8 \times 5/2 \times 1/2 = \frac{649}{288}\ m$$

$$A_{\ominus} = -1/8 \times 5 \times 1/2 - 3/8 \times 3/2 \times 1/2 = -\frac{107}{96}\ m$$

$$A_{TOTAL} = \frac{41}{36}\ m$$

$$V_{S1MIN} = \left(\frac{41}{36}\ m\right) \times 30\ kN/m + \left(-\frac{107}{96}\ m\right) \times 15\ kN/m$$

$$+100\ kN \times (-1/3) + 80\ kN\,(-1/9 \times 2) = -\frac{9695}{288}$$

$$= \boxed{-33,66\ kN}$$

TE16-B2-2002

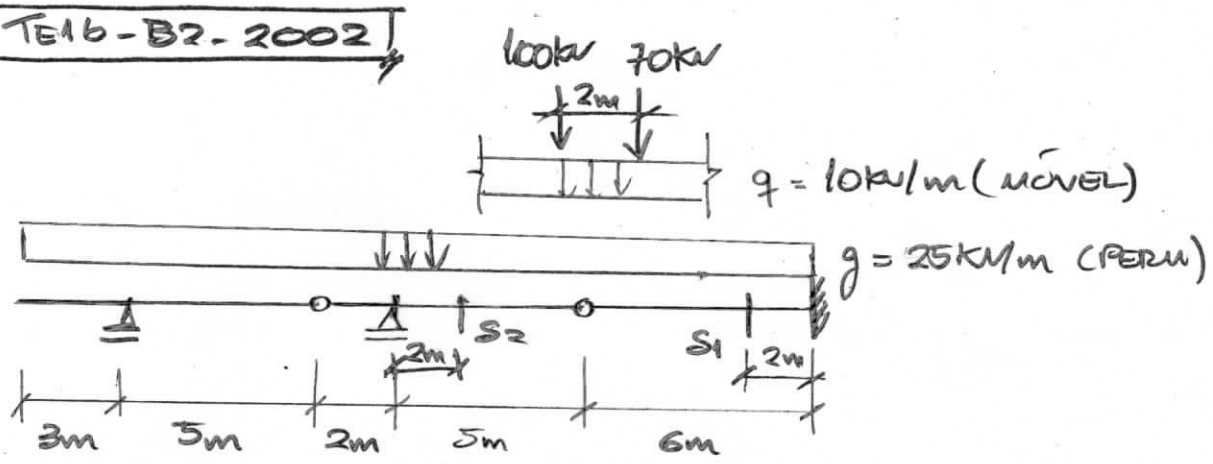

→ DETERMINAR: $V_{S1\,MÁX}$ e $M_{S2\,MÁX}$;

LI V_{S1}:

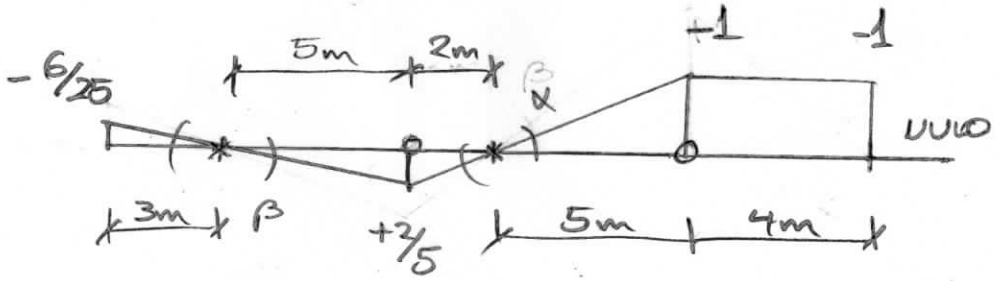

$tg\alpha = 1/5$

$tg\beta = 2/5 \times 1/5 = 2/25$

$A_{\oplus} = (5m+2m) \times 2/5 \times 1/2 = +7/5\ m$

$A_{\ominus} = 4m \times (-1) + 5m \times (-1) \times 1/2 + 3m \times (-6/25) \times 1/2 = -\frac{343}{50}\ m$

$A_{TOTAL} = 7/5 - 343/50 = -273/50\ m$

$V_{S1\,MÁX} = -\frac{273}{50}\ m \times 25\frac{kN}{m} + 10\frac{kN}{m} \times \frac{7}{5}\ m$

$+ 100kN(+2/5) + 70kN(3 \times 2/25) = \boxed{-65{,}7\ kN}$

LIMS2:

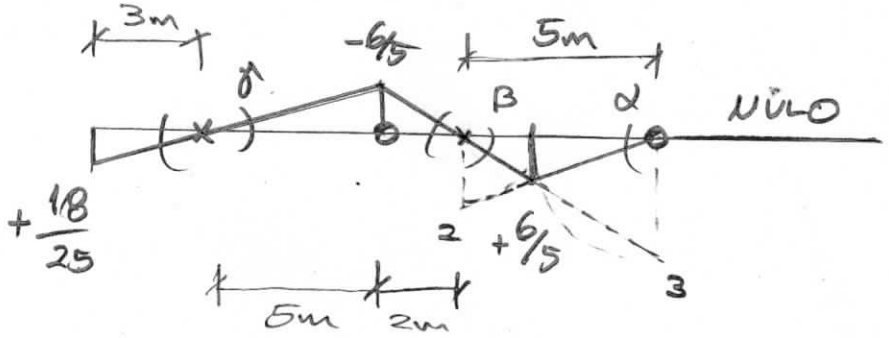

$tg\alpha = 2/5$

$tg\beta = 3/5$

$tg\gamma = 6/5 \times 1/5 = 6/25$

$A\oplus = 5m \times 6/5 m \times 1/2 + 18/25 m \times 3m \times 1/2 = 102/25\ m^2$

$A\ominus = 7m \times -6/5 m \times 1/2 = -21/5\ m^2$

$A_{TOTAL} = 102/25\ m^2 - 21/5\ m^2 = -3/25\ m^2$

$$MS2\ MÍN = \left[-3/25\ m^2\right] \times 25\ kV/m + 10\ kV/m \left[-21/5\ m^2\right]$$

$$+100kV \times (-6/5\ m) + 70kV\ (-3m \times 6/25) = \boxed{-215{,}4\ kV/m}$$

TE16-B2-3000

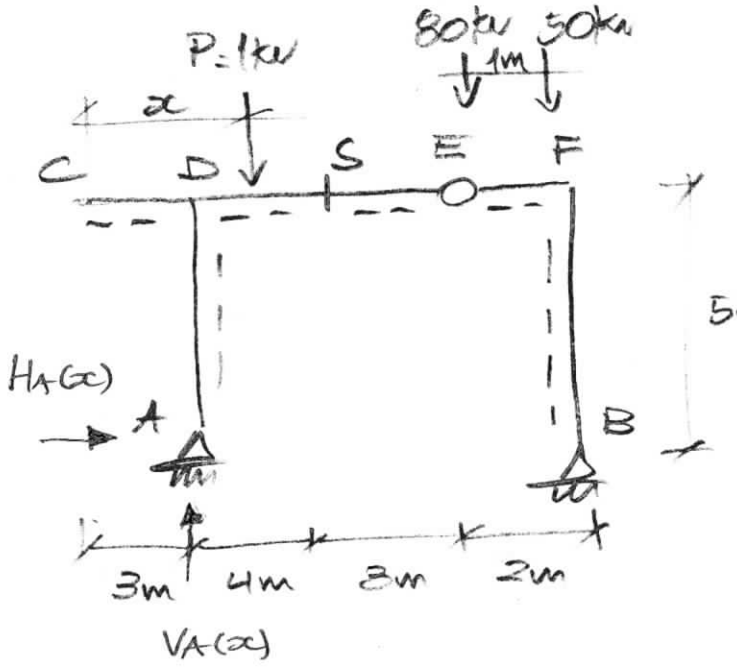

* DETERMINAR O MÁXIMO E O MÍNIMO MOMENTO FLETOR QUE OCORRE NA SEÇÃO "S" COM A APLICAÇÃO DO TREM-TIPO INDICADO

$\Sigma M_B = 0 \quad \circlearrowleft + \quad V_A(x) \times 9m - P(12m - x) = 0$

$V_A(x) = \frac{1}{9}(12 - x)$ $\qquad$ $V_A(x) = \frac{4}{3} - \frac{x}{9}$

$\Sigma M_E = 0 \quad \circlearrowright + \quad H_A(x) \times 5m - V_A(x) \times 7m + P(10m - x) = 0$

$H_A^{Pesq}(x) = \frac{1}{5}(7 V_A(x) - (10 - x))$

$H_A^{Pesq}(x) = \frac{1}{5}\left(7\left(\frac{4}{3} - \frac{1}{9}x\right) - 10 + x\right) = \frac{1}{5}\left(\frac{28}{3} - \frac{7}{9}x - 10 + x\right)$

$H_A^{Pesq\,E}(x) = \frac{2}{45}x - \frac{2}{15}$

$H_A^{Pdur}(x) = \frac{1}{5}(7 V_A(x)) = \frac{7}{5}\left(\frac{4}{3} - \frac{1}{9}x\right)$

$H_A^{Pdur\,E}(x) = -\frac{7}{45}x + \frac{28}{15}$

$$M_S^{PCS}(x) = V_A(x)\times 4 - \overset{P\,esq\,E}{H_A(x)}\times 5 - P(7-x)$$

$$M_S^{PCS}(x) = 4\left(\tfrac{4}{3} - \tfrac{x}{9}\right) - 5\left(\tfrac{2}{45}x - \tfrac{2}{15}\right) - 7 + 10$$

$$\boxed{M_S^{PCS}(x) = -1 + \tfrac{1}{3}x}$$

$$M_S^{PSE}(x) = V_A(x)\times 4 - \overset{P\,esq\,E}{H_A(x)}\times 5$$

$$M_S^{PCS}(x) = 4\left(\tfrac{4}{3} - \tfrac{x}{9}\right) - 5\left(\tfrac{2}{45}x - \tfrac{2}{15}\right)$$

$$\boxed{M_S^{PCS}(x) = 6 - \tfrac{2}{3}x}$$

$$M_S^{PEF}(x) = V_A(x)\times 4 - \overset{P\,dir\,E}{H_A(x)}\times 5$$

$$M_S^{PEF}(x) = 4\left(\tfrac{4}{3} - \tfrac{x}{9}\right) - 5\left(-\tfrac{7}{45}x + \tfrac{28}{15}\right)$$

$$\boxed{M_S^{PEF}(x) = -4 + \tfrac{1}{3}x}$$

$tg\,\alpha = 1/3$

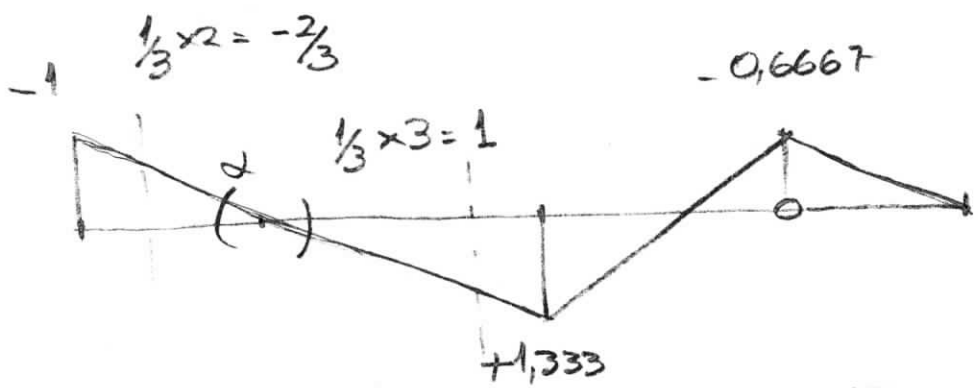

$$M_{S\,MÁX} = 80\,kN\times(1{,}333\,m) + 50\,kN\times(1\,m) = \boxed{156{,}6\ kNm}$$

$$M_{S\,MÍN} = 80\,kN\times(-1\,m) + 50\,kN\times\left(-\tfrac{2}{3}\,m\right) = \boxed{-113{,}3\ kNm}$$

TE16 - B2 - 3001

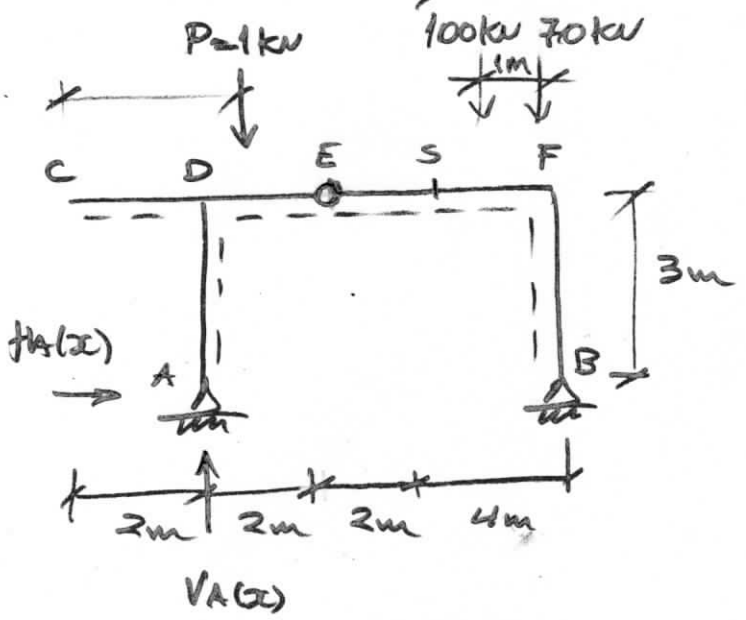

CALCULAR:

$M_{S\,MÁX}$ e $M_{S\,MÍN}$;

$$\circlearrowright^{\oplus} \sum M_B = 0 \quad V_A(x) \times 8 - P(10 - x) = 0 \quad \boxed{V_A(x) = \frac{10}{8} - \frac{x}{8}}$$

$$\circlearrowright^{\oplus} \sum M_E = 0 \quad -H_A(x) \times 3 + V_A(x) \times 2 - P(4 - x) = 0$$

$$H_A(x) = \frac{1}{3}\left(2\left[\frac{10}{8} - \frac{x}{8}\right] - 4 + x\right)$$

$$\overset{P_{esq\,E}}{H_A(x)} = \frac{20}{24} - \frac{2x}{24} - \frac{4}{3} + \frac{x}{3} = \boxed{\frac{1}{4}x - \frac{1}{2}}$$

$$\overset{P_{dir\,E}}{H_A(x)} = \boxed{-\frac{x}{12} + \frac{5}{6}}$$

$$\overset{P_{CE}}{M_S(x)} = V_A(x) \times 4 - \overset{P_{esq\,E}}{H_A(x)} \times 3 - P(6 - x)$$

$$= \frac{40}{8} - \frac{4}{8}x - \frac{3}{4}x + \frac{3}{2} - 6 + x = \boxed{-\frac{1}{4}x + \frac{1}{2}}$$

$$\overset{P_{ES}}{M_S(x)} = V_A(x) \times 4 - \overset{P_{dir\,E}}{H_A(x)} \times 3 - P(6 - x)$$

$$= \frac{40}{8} - \frac{4}{8}x + \frac{3}{12}x - \frac{15}{6} - 6 + x = \boxed{\frac{3}{4}x - \frac{7}{2}}$$

$$M_{S(x)}^{PSF} = V_{A(x)} \times 4 - H_{A(x)}^{PONTE} \times 3$$

$$= \frac{40}{8} - \frac{4}{8}x + \frac{3}{12}x - \frac{15}{6} = \boxed{-\frac{1}{4}x + \frac{5}{2}}$$

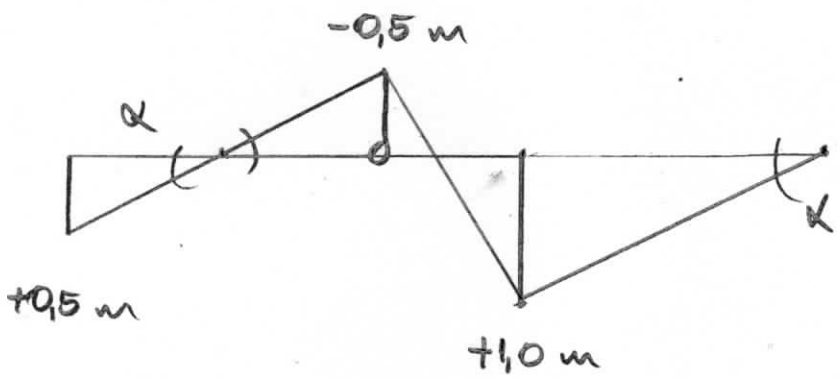

$tg = 1/4$

$M_{SMÁX} = 100\,kN(1m) + 70\,kN(\frac{1}{4} \times 3) = \boxed{152,5\,kN.m}$

$M_{SMÍN} = 100\,kN(-0,5m) + 70\,kN(-\frac{1}{4} \times 1) = \boxed{-67,5\,kN.m}$

TE16 - B2 - 3002

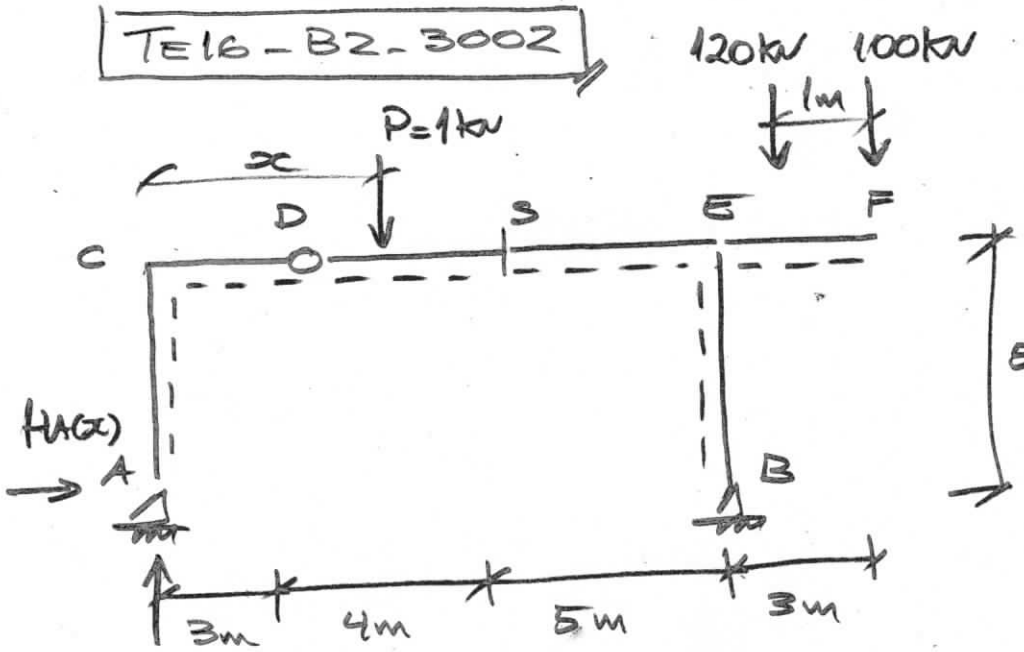

⇒ DETERMINAR
$M_{S\,MÁX.}$
$M_{S\,MÍN.}$

$V_{A(x)}$

$\Sigma M_B = 0 \;\curvearrowright\oplus\; V_{A(x)} \times 12 - P(12-x) = 0$

$V_{A(x)} = \frac{1}{12}(12-x) \rightsquigarrow \boxed{V_{A(x)} = 1 - x/12}$

$\Sigma M_D^{ESQ} = 0 \;\curvearrowright\oplus\; -H_{A(x)} \times 5 + V_{A(x)} \times 3 - P(3-x) = 0$

$H_{A(x)}^{PesqD} = \frac{1}{5}\left(3\left(1-\frac{x}{12}\right) - 3 + x\right) = \frac{1}{5}\left(3 - \frac{3x}{12} - 3 + x\right)$

$\boxed{H_{A(x)}^{PesqD} = \frac{3}{20}x}$

$H_{A(x)}^{PdinD} = \frac{1}{5}\left(3\left(1-\frac{x}{12}\right)\right) \Rightarrow \boxed{H_{A(x)}^{PdinD} = -\frac{x}{20} + \frac{3}{5}}$

$M_{S(x)}^{CD} = V_{A(x)} \times 7 - H_{A(x)}^{PesqD} \times 5 - P(7-x)$

$M_{S(x)}^{CD} = 7\left(1-\frac{x}{12}\right) - 5\left(\frac{3}{20}x\right) - 7 + x$

$\boxed{M_{S(x)}^{CD} = -\frac{1}{3}x}$

$$M_S^{DS}(x) = V_A(x) \times 7 - H_A(x) \times 5 - P_{\text{dir D}}(7-x)$$

$$M_S^{DS}(x) = 7\left(1-\frac{x}{12}\right) - 5\left(\frac{-x}{20}+\frac{3}{5}\right) - 7 + x$$

$$\boxed{M_S^{DS}(x) = -3 + \frac{2}{3}x}$$

$$M_S^{SF}(x) = V_A(x) \times 7 - H_A(x)_{\text{dir D}}$$

$$M_S^{SF}(x) = 7\left(1-\frac{x}{12}\right) - 5\left(\frac{-x}{20}+\frac{3}{5}\right)$$

$$\boxed{M_S^{SF}(x) = 4 - \frac{1}{3}x}$$

LI M_S:

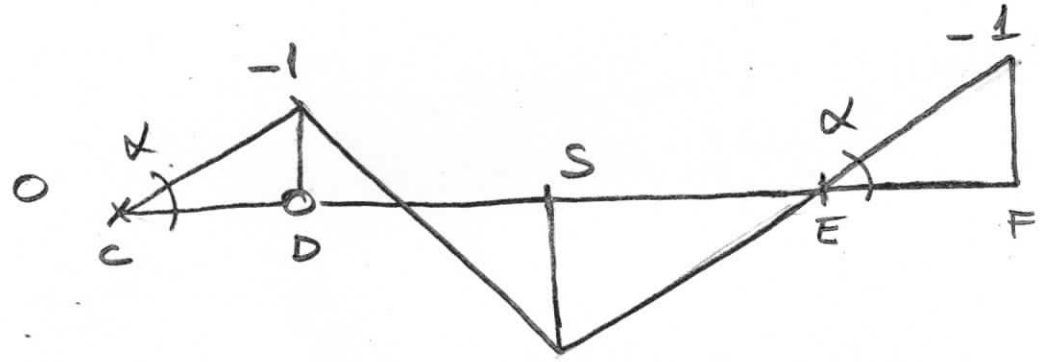

$tg\alpha = -1/3$

$$M_{S\,MÁX} = 120\,kN\left(+\tfrac{5}{3}m\right) + 100\,kN\left(\tfrac{1}{3} \times 4m\right) = \boxed{+333{,}33\ kNm}$$

$$M_{S\,MÍN} = 120\,kN(-1m) + 100\,kN\left(-\tfrac{1}{3} \times 2m\right) = \boxed{-186{,}67\ kNm}$$