TE2-5.3a

* EI IGUAL P/ TODAS AS BARRAS

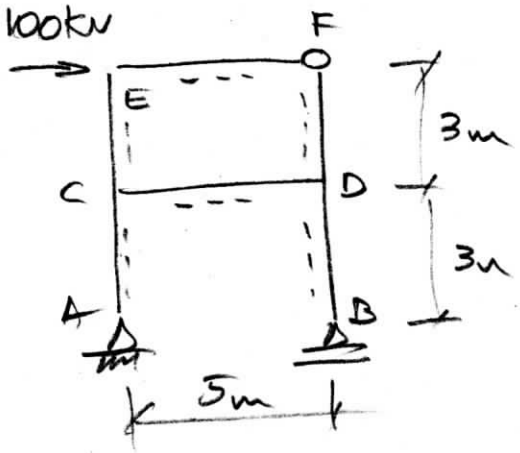

CASO 0

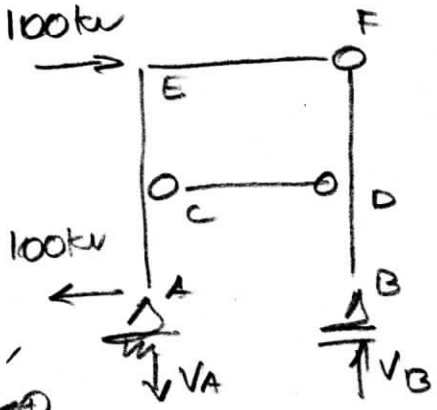

$\circlearrowleft \Sigma M_A = 0$

$100\,kN \times 6m - V_B \times 5m = 0$

$V_B = \frac{600\,kN.m}{5m} = 120\,kN$

$V_A = -120\,kN$

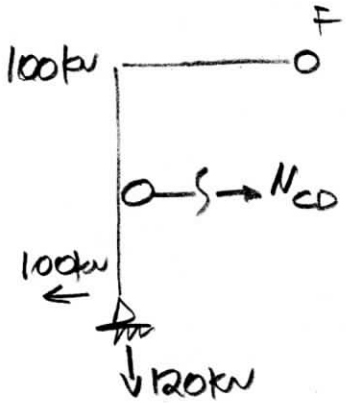

CÁLCULO DE N_{CD}

$\circlearrowleft \Sigma M_F = 0$

$-120 \times 5 + 100 \times 6 - N_{CD} \times 3 = 0$

$N_{CD} = \frac{1}{3}(-600 + 600)$

$N_{CD} = 0$ //

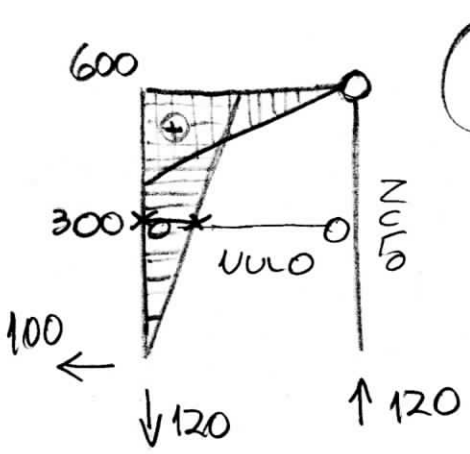

M_0

CASO 1

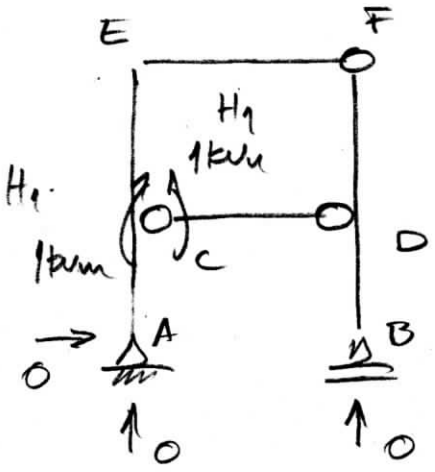

$\curvearrowright^{+} \Sigma M_A = 0$

$V_A' = V_B' = 0$

$H_A = 0$

M_1

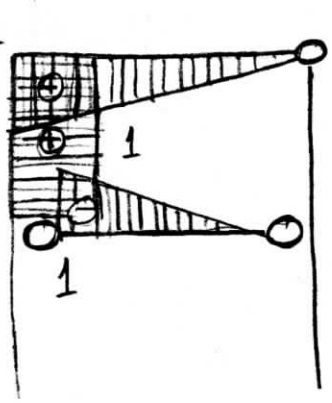

CASO 2

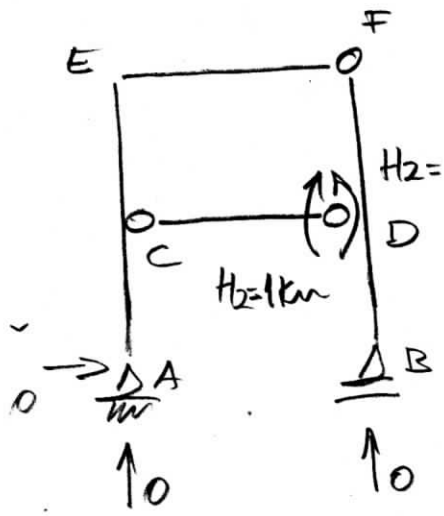

$\curvearrowright^{+} \Sigma M_A = 0$

$V_A'' = V_B'' = 0$

$H_A'' = 0$

M_2

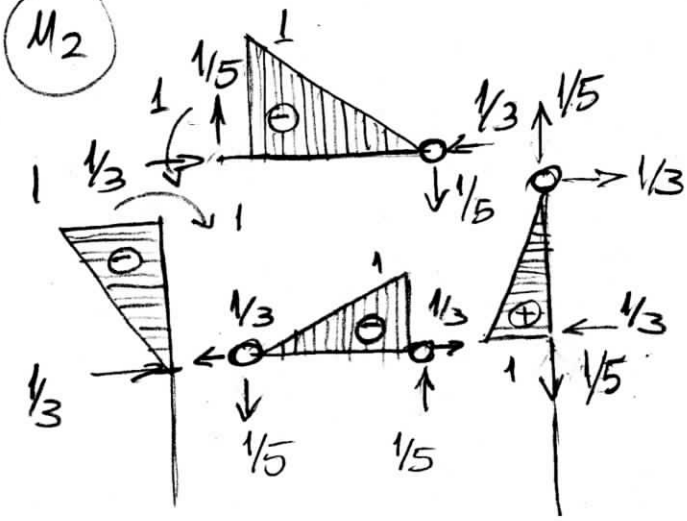

$$\delta_{10} = \frac{1}{3}.5.600.1 + \frac{1}{2}.3.1.(600+300) = 2350/EI$$

$$\delta_{20} = \frac{1}{3}.5.600.-1 + \frac{1}{6}.3.-1.(300+2\times600) = -1750/EI$$

$$\delta_{11} = 2\times\frac{1}{3}\times5\times1\times1 + 3\times1\times1 = 19/3\,EI$$

$$\delta_{22} = 2\times\frac{1}{3}\times5\times1\times1 + 2\times\frac{1}{3}\times3\times1\times1 = 16/3\,EI$$

$$\delta_{12} = \frac{1}{3}\times5\times1\times-1 + \frac{1}{6}\times5\times(1)\times(-1) + \frac{1}{2}\times3\times(+1)\times(-1) = -7/3\,EI$$

$$\begin{bmatrix} 19/3 & -7/3 \\ -7/3 & 16/3 \end{bmatrix} \begin{Bmatrix} M_1 \\ M_2 \end{Bmatrix} = \begin{Bmatrix} -2350 \\ +1750 \end{Bmatrix}$$

$M_1 = -298{,}24$ kNm

$M_2 = +197{,}65$ kNm

BARRA CD:

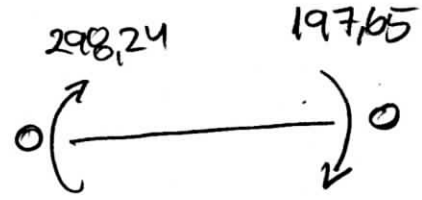

$$V_A = V_{A_0} + M_1 \times V_A' + M_2 \times V_A''$$

$$= -120 - 298{,}24 \times 0 + 197{,}65 \times 0 = 120$$

* O NÚMERO DE APOIOS É IGUAL AO NUMERO DE CONDIÇÕES DE EQUILÍBRIO DA ESTÁTICA
  ↳ AS REAÇÕES DE APOIO PODEM SER DETERMINADAS DIRETAMENTE.

BARRA AC

$M_{C_{AC}} = 100 \times 3 = +300$ kNm

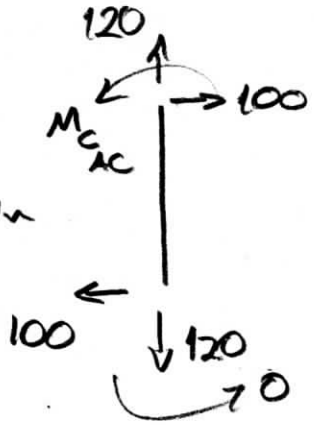



NÓ C

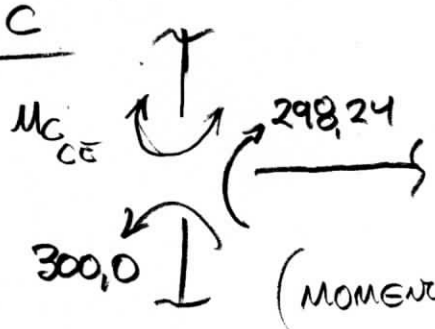

$\oplus \circlearrowright \sum M_C = 0 \quad M_{C_{CE}} + 298{,}24 - 300 = 0$

$M_{C_{CE}} = 300 - 298{,}24 = \underline{1{,}76 \text{ kNm}}$

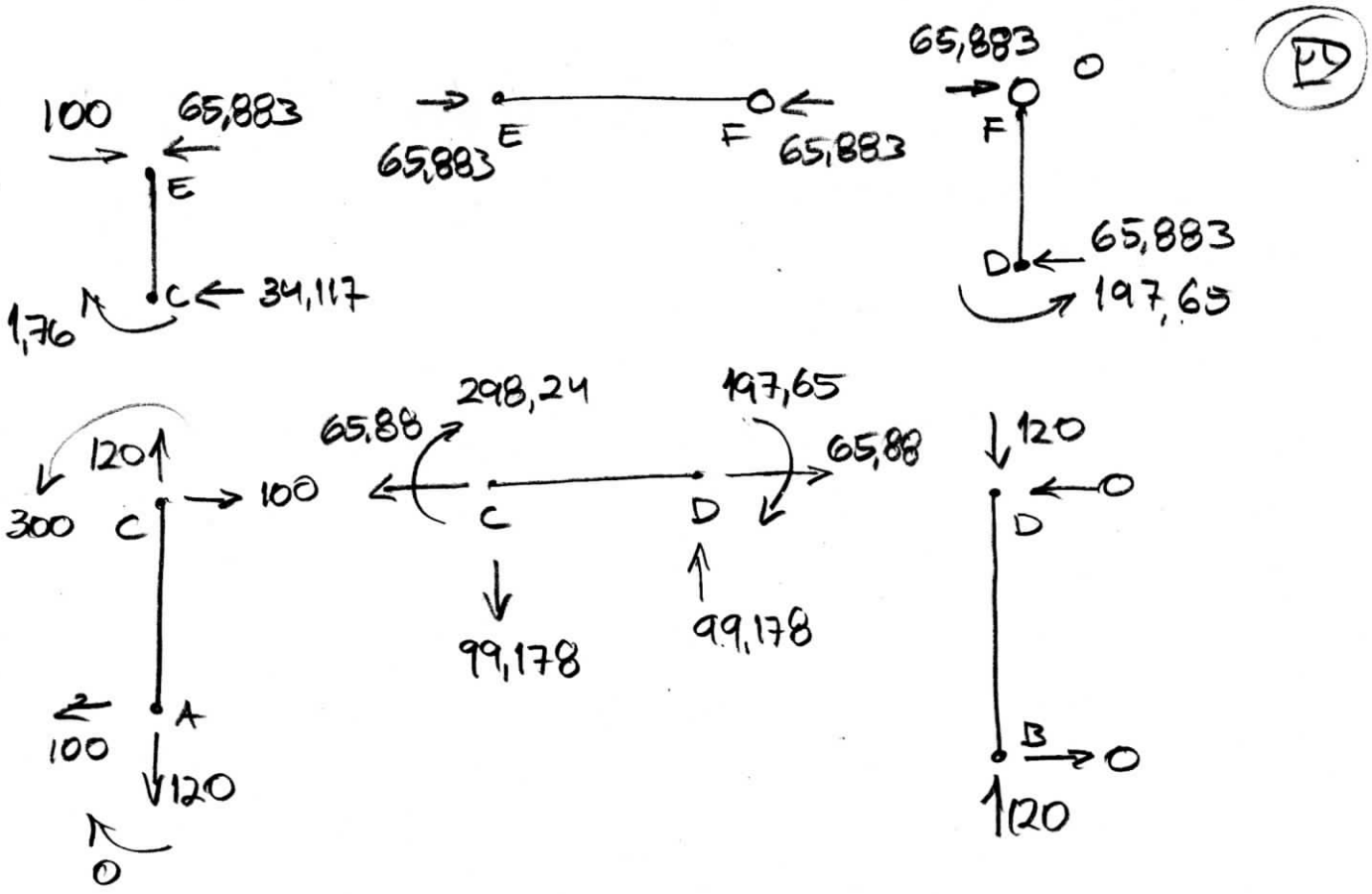

$\overset{\oplus}{\curvearrowright} \Sigma M_{F_{FD}} = 0 \qquad -197{,}65 + V_D \times 3 = 0 \qquad V_D = 197{,}65/3 = 65{,}883\,kN$

$\overset{\oplus}{\curvearrowright} \Sigma M_{D_{CD}} = 0 \qquad 298{,}24 + 197{,}65 - V_C \times 5m = 0$

$V_C = (298{,}24 + 197{,}65)/5 = 99{,}178$

$M_E = 1{,}76 + 34{,}117 \times 3 = 104{,}111\,kNm$

