TE2-7.1

⇒ DETERMINAR O DIAGRAMA DE MOMENTOS FLETORES:

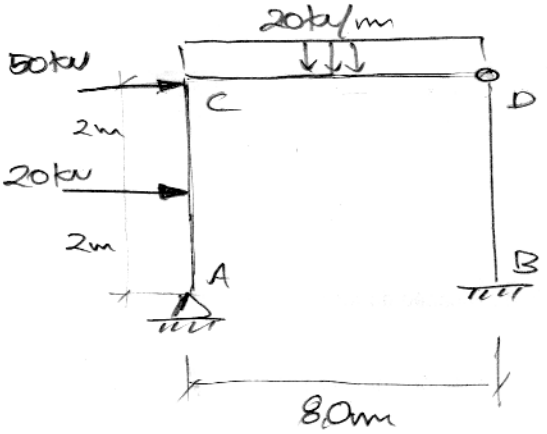

$E = 20 GPa$

$I = 1{,}538 \times 10^{-2}\ m^4$ } p/ todas as barras

* Barras inextensíveis

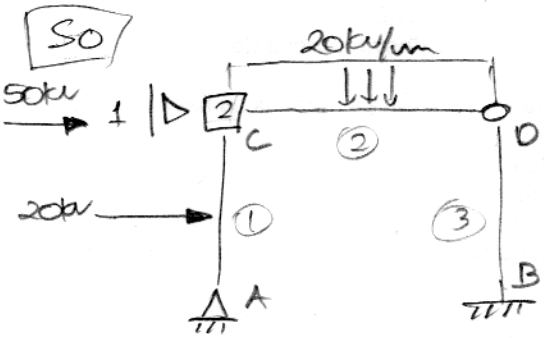

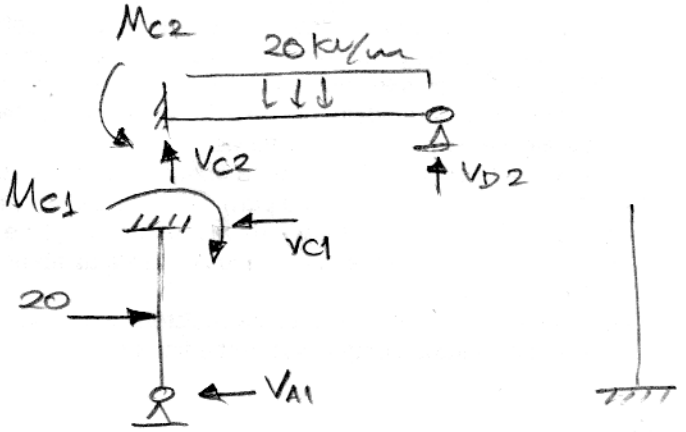

$V_{A1} = \frac{5P}{16} = \frac{5 \times 20}{16} = 6{,}25\ kN$

$V_{C1} = \frac{11}{16} P = \frac{11}{16} \times 20 = 13{,}75\ kN$

$M_{C1} = \frac{3PL}{16} = \frac{3}{16} \times 20 \times 4 = 15\ kNm$

$M_{C2} = \frac{qL^2}{8} = \frac{20}{8} \times 8^2 = 160\ kNm$

$V_{C2} = \frac{5qL}{8} = \frac{5 \times 20 \times 8}{8} = 100\ kN$

$V_{D2} = \frac{3qL}{8} = \frac{3 \times 20 \times 8}{8} = 60\ kN$

$\left.\begin{array}{l} F1 = -13{,}75 \\ F2 = 145 \end{array}\right\}$

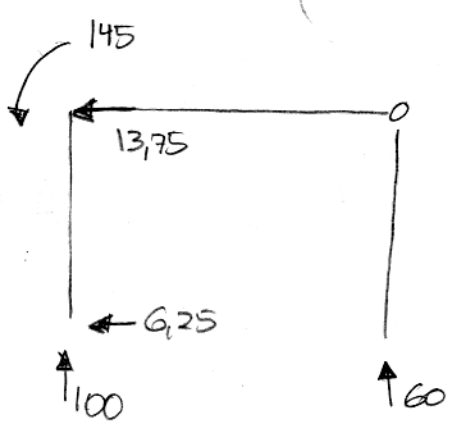

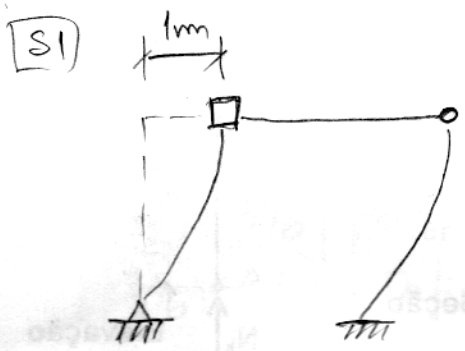

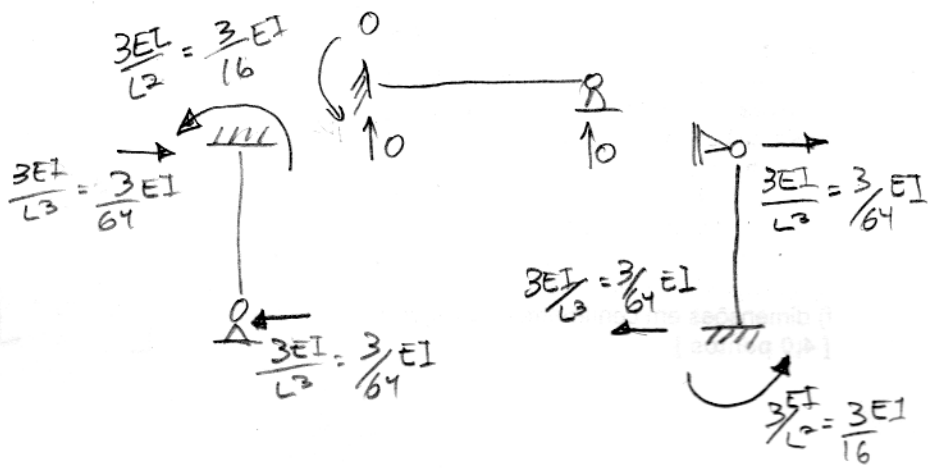

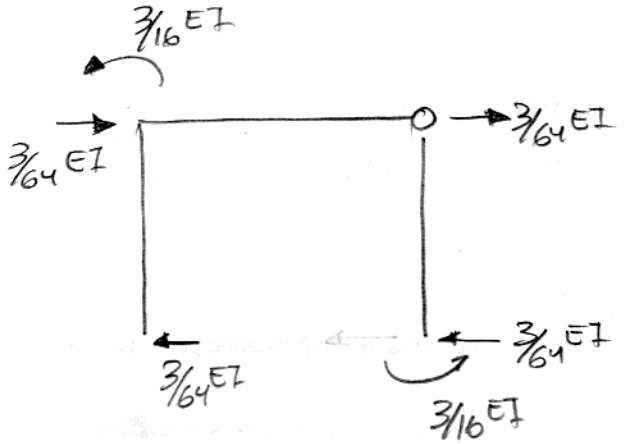

$K_{11} = \frac{6}{64} EI = \frac{3}{32} EI$

$K_{21} = \frac{3}{16} EI$

S2

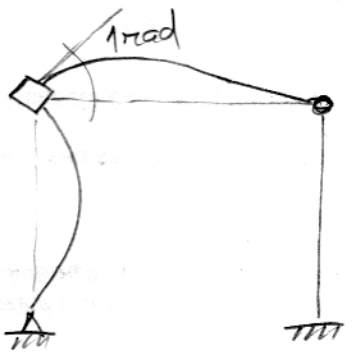

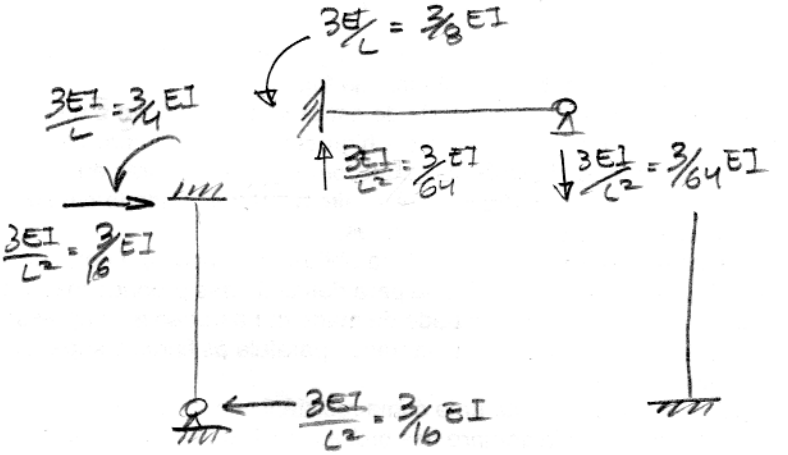

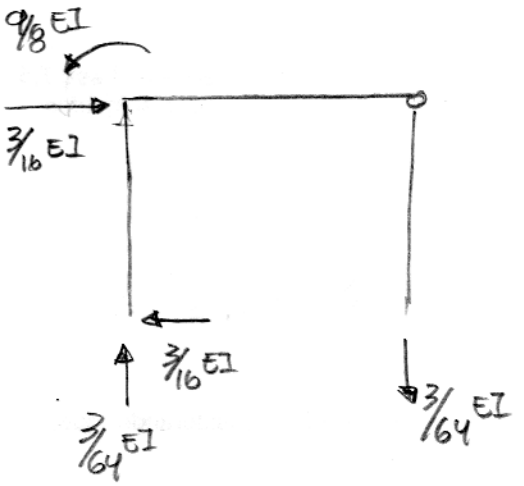

$K_{12} = \frac{3}{16} EI$

$K_{22} = \frac{9}{8} EI$

- Sistema de equações:

$$EI \begin{bmatrix} 3/32 & 3/16 \\ 3/16 & 9/8 \end{bmatrix} \begin{bmatrix} D_1 \\ D_2 \end{bmatrix} = \begin{bmatrix} 13{,}75 \\ -145 \end{bmatrix}$$

* Aplicação das cargas modais

$13{,}75 + 50 = 63{,}75$

$$EI \begin{bmatrix} 3/32 & 3/16 \\ 3/16 & 9/8 \end{bmatrix} \begin{bmatrix} D_1 \\ D_2 \end{bmatrix} = \begin{bmatrix} 63{,}75 \\ -145 \end{bmatrix} \times (-1/2)$$

$$EI \begin{bmatrix} 3/32 & 3/16 \\ -3/32 & -9/16 \end{bmatrix} \begin{bmatrix} D_1 \\ D_2 \end{bmatrix} = \begin{bmatrix} 63,75 \\ +72,5 \end{bmatrix}$$

$EI = 1,538 \times 10^{-2} \times 20 \times 10^{6}$

$EI = 307600\ kN\,m^2$

$-6/16\ EI\ D_2 = 136,25$ $\quad D_2 = \frac{16 \times 136,25}{-6\,EI} = -1,1812 \times 10^{-3}\ rad$

$3/32\ EI.D_1 + 3/16\ EI.D_2 = 63,75$

$D_1 = \left(63,75 - 3/16\ EI.D_2\right) 32/3EI$

$D_1 = \left(\frac{63,75}{EI} - 3/16\ D_2\right) 32/3 = 4,5730 \times 10^{-3}\ m$

$M_{C1} = ?$

$M_{C1} = M_{C1_0} + M_{C1_1} D_1 + M_{C1_2} D_2$

$M_{C1} = -15 + 3/16\ EI.D_1 + 3/4\ EI.D_2$

$= -15 + 3/16\ 307600 . 4,573 \times 10^{-3} + 3/4\ 307600 \times -1,1812 \times 10^{-3}$

$= -23,75\ kN\,m$

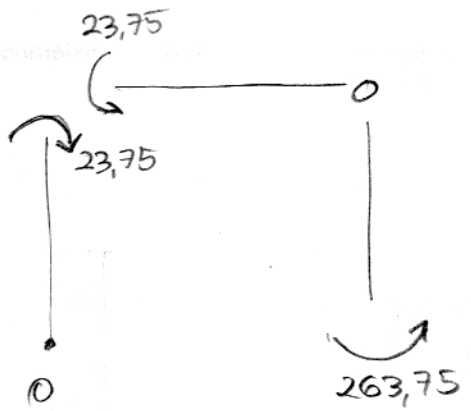

$M_B = M_{B_0} + M_{B_1} D_1 + M_{B_2} D_2$

$M_B = 0 + 3/16\ EI \times D_1 + 0 \times D_2$

$M_B = 3/16 \times 307600 \times 4,373 \times 10^{-3}$

$M_B = 263,75\ kN\,m$

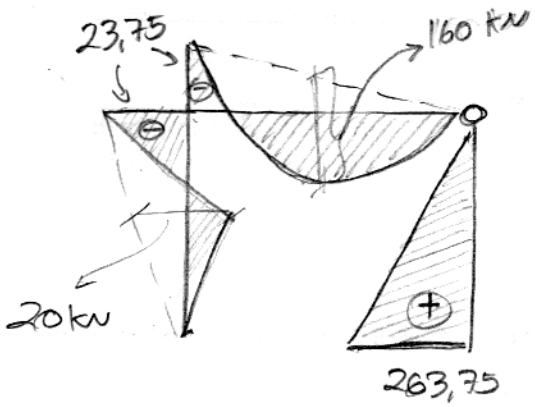

$q\frac{l^2}{8} = 160\,kNm$

$\frac{Pab}{L} = 20 \times 2 \times \frac{2}{4} = 20$